Brunata ZENNER

Totalizzatore azzerabile con display ISI30

ISI30

ISI30 - Totalizer

Features

– ISI30 - Impulse counter

Technical data - electrical ratings	
Power supply	lithium battery (approx. 8 years at 20 °C)
Display	LCD, 7-segment display
Backlit	24 VDC ±20 %, 50 mA
Number of digits	8-digits
Display range	-9999999...+99999999
Digit height	8 mm
Reset	Button and electric
Keylock	Yes, electric (keylock)
Emitted interference	DIN EN 61000-6-4
Interference immunity	DIN EN 61000-6-2
Programmable parameters	Count mode
Approvals	UL/cUL, CE conform
ISI30	
Function	Fast and slow counting
Count mode	Adding or subtracting
Control	NPN, PNP, Contact, Impulses 10...260 VAC/VDC

Technical data - electrical ratings	
Count modes	A 90° B phase evaluation x1 A 90° B phase evaluation x2
Control	NPN, PNP

Technical data - mechanical design	
Operating temperature	-10...+60 °C
Storing temperature	-20...+70 °C
Relative humidity	80 % non-condensing
Core cross-section	2.5 mm² fine wire AWG 12
Protection DIN EN 60529	IP 65 face with seal
Housing type	Housing for control panel installation
Housing colour	Deep grey, RAL 7021
Dimensions W x H x L	48 x 24 x 48 mm
Installation depth	47.7 mm
Mounting	Clip frame or screw mount
Cutout dimensions	25 x 50 mm (+0.5)
Weight approx.	50 g

SCHEMA DI COLLEGAMENTO CONTATORE (WOLTMAN) / VISUALIZZATORE ISI30

MORSETTIERA ISI 30

1

2 ---------- ingresso lancia impulsi da WOLTMAN

4-----

6---------- ingresso lancia impulsi da WOLTMAN

N.B. PER ABILITARE AZZERAMENTO DA PULSANTE FRONTALE BISOGNA CORTOCIRCUITARE I MORSETTI 4-6

Trigger level

Inputs NPN inputs	Input circuit Comparator (pin 1+2)
Input level Low	0...0.7 VDC
Input level High	3...30 VDC
Input resistance	1 MΩ
PNP inputs	**Comparator (pin 1+2)**
Input level Low	0...0.7 VDC
Input level High	4...30 VDC
Input resistance	100 kΩ

Inputs AC/DC inputs	Input circuit Optocoupler (pin 1+3)
Input level Low	0...2 VDC/VAC
Input level High	10...260 VDC/VAC
Input resistance	160 kΩ
NPN control inputs	**Pin 4, 5**
Input level Low	0...0.7 VDC
Input level High	3...5 VDC
Input resistance	2.2 MΩ

Dimensions

ISI30, ISI31, ISI32, ISI33

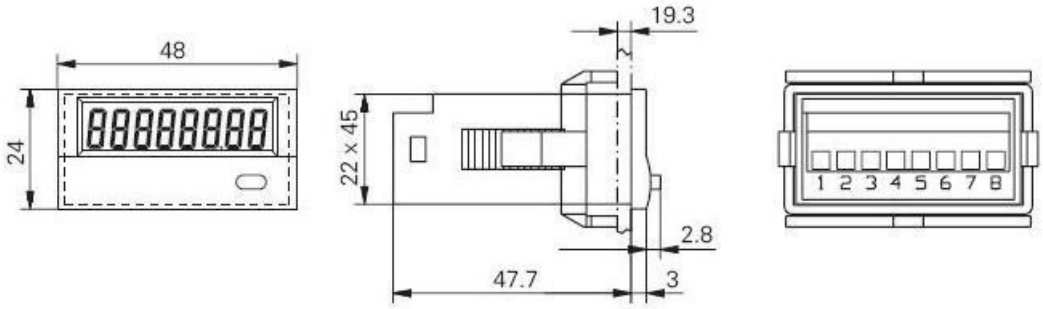
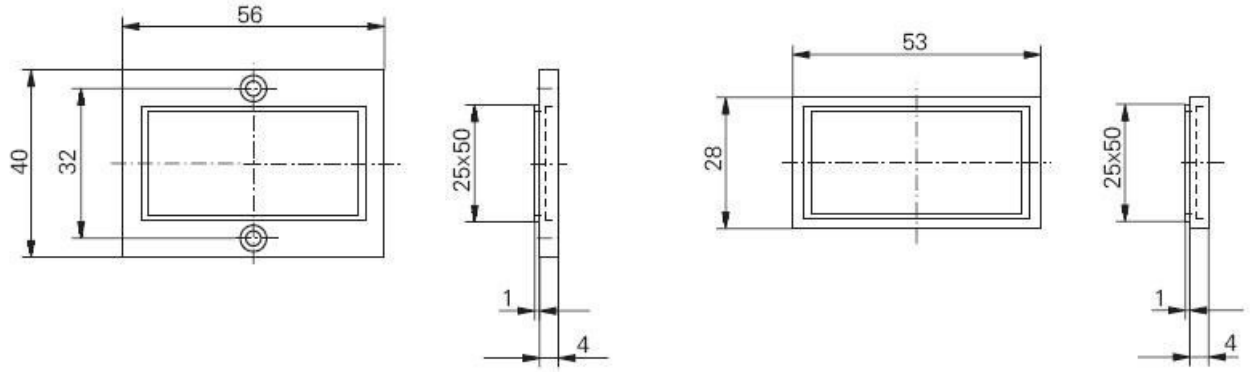
Front frame for screw/clip mount (included with delivery)